UNITED STATES PATENT AND TRADEMARK OFFICE

UNITED STATES DEPARTMENT OF COMMERCE
United States Patent and Trademark Office
Address: COMMISSIONER FOR PATENTS
P.O. Box 1450
Alexandria, Virginia 22313-1450
www.uspto.gov

APPLICATION NO.	FILING DATE	FIRST NAMED INVENTOR	ATTORNEY DOCKET NO.	CONFIRMATION NO.
18/552,145	09/22/2023	Zuo LIANG	8100-0028PUS1	8664

143118 7590 11/10/2025

ASLAN LAW, P.C.
P.O. Box 3268
8409 Lee Hwy
Merrifield, VA 22116-9998

EXAMINER	
JONES, LOGAN P	

ART UNIT	PAPER NUMBER
3762	

NOTIFICATION DATE	DELIVERY MODE
11/10/2025	ELECTRONIC

Please find below and/or attached an Office communication concerning this application or proceeding.

The time period for reply, if any, is set in the attached communication.

Notice of the Office communication was sent electronically on above-indicated "Notification Date" to the following e-mail address(es):

mail@aslan.law
uspto@dockettrak.com

Office Action Summary	Application No. 18/552,145	Applicant(s) LIANG, Zuo	
	Examiner LOGAN P JONES	Art Unit 3762	AIA (First Inventor to File) Status Yes

-- The MAILING DATE of this communication appears on the cover sheet with the correspondence address --

Period for Reply

A SHORTENED STATUTORY PERIOD FOR REPLY IS SET TO EXPIRE 3 MONTHS FROM THE MAILING DATE OF THIS COMMUNICATION.

- Extensions of time may be available under the provisions of 37 CFR 1.136(a). In no event, however, may a reply be timely filed after SIX (6) MONTHS from the mailing date of this communication.
- If NO period for reply is specified above, the maximum statutory period will apply and will expire SIX (6) MONTHS from the mailing date of this communication.
- Failure to reply within the set or extended period for reply will, by statute, cause the application to become ABANDONED (35 U.S.C. § 133). Any reply received by the Office later than three months after the mailing date of this communication, even if timely filed, may reduce any earned patent term adjustment. See 37 CFR 1.704(b).

Status

1)☑ Responsive to communication(s) filed on 22 September 2023.

☐ A declaration(s)/affidavit(s) under **37 CFR 1.130(b)** was/were filed on _____.

2a)☐ This action is **FINAL.** 2b) ☑ This action is non-final.

3)☐ An election was made by the applicant in response to a restriction requirement set forth during the interview on _____; the restriction requirement and election have been incorporated into this action.

4)☐ Since this application is in condition for allowance except for formal matters, prosecution as to the merits is closed in accordance with the practice under *Ex parte Quayle*, 1935 C.D. 11, 453 O.G. 213.

Disposition of Claims*

5) ☑ Claim(s) 1-7 is/are pending in the application.

5a) Of the above claim(s) _____ is/are withdrawn from consideration.

6) ☐ Claim(s) _____ is/are allowed.

7) ☑ Claim(s) 1-7 is/are rejected.

8) ☐ Claim(s) _____ is/are objected to.

9) ☐ Claim(s) _____ are subject to restriction and/or election requirement

* If any claims have been determined allowable, you may be eligible to benefit from the **Patent Prosecution Highway** program at a participating intellectual property office for the corresponding application. For more information, please see http://www.uspto.gov/patents/init_events/pph/index.jsp or send an inquiry to **PPHfeedback@uspto.gov.**

Application Papers

10)☐ The specification is objected to by the Examiner.

11)☑ The drawing(s) filed on 22 September 2023 is/are: a)☑ accepted or b)☐ objected to by the Examiner.

Applicant may not request that any objection to the drawing(s) be held in abeyance. See 37 CFR 1.85(a).

Replacement drawing sheet(s) including the correction is required if the drawing(s) is objected to. See 37 CFR 1.121(d).

Priority under 35 U.S.C. § 119

12)☑ Acknowledgment is made of a claim for foreign priority under 35 U.S.C. § 119(a)-(d) or (f).

Certified copies:

a)☑ All b)☐ Some** c)☐ None of the:

1.☑ Certified copies of the priority documents have been received.

2.☐ Certified copies of the priority documents have been received in Application No. _____.

3.☐ Copies of the certified copies of the priority documents have been received in this National Stage application from the International Bureau (PCT Rule 17.2(a)).

** See the attached detailed Office action for a list of the certified copies not received.

Attachment(s)

1) ☑ Notice of References Cited (PTO-892)

2) ☑ Information Disclosure Statement(s) (PTO/SB/08a and/or PTO/SB/08b) Paper No(s)/Mail Date _____.

3) ☐ Interview Summary (PTO-413) Paper No(s)/Mail Date _____.

4) ☐ Other: _____.

Notice of Pre-AIA or AIA Status

The present application, filed on or after March 16, 2013, is being examined under the first inventor to file provisions of the AIA.

DETAILED ACTION

Claim Objections

Claims 4 and 6 recite "the central axis of the candle wick is 0.5° to 5" which should be -the central axis of the candle wick is 0.5° to 5°- or -the central axis of the candle wick is 0.5 to 5 degrees-. Appropriate correction is required.

Claim Rejections - 35 USC § 112

> The following is a quotation of 35 U.S.C. 112(b):
> (b) CONCLUSION.—The specification shall conclude with one or more claims particularly pointing out and distinctly claiming the subject matter which the inventor or a joint inventor regards as the invention.
>
> The following is a quotation of 35 U.S.C. 112 (pre-AIA), second paragraph:
> The specification shall conclude with one or more claims particularly pointing out and distinctly claiming the subject matter which the applicant regards as his invention.

Claims 2-4 are rejected under 35 U.S.C. 112(b) or 35 U.S.C. 112 (pre-AIA), second paragraph, as being indefinite for failing to particularly point out and distinctly claim the subject matter which the inventor or a joint inventor (or for applications subject to pre-AIA 35 U.S.C. 112, the applicant), regards as the invention.

The term "large" in **claim 2** is a relative term which renders the claim indefinite. The term "large" is not defined by the claim, the specification does not provide a standard for ascertaining the requisite degree, and one of ordinary skill in the art would not be reasonably apprised of the scope of the invention. For the purpose of examination "a tapered hole with a large upper portion and a smaller lower portion" will be interpreted as – a tapered hole with an upper portion and a lower portion smaller than the upper portion-.

Claim Rejections - 35 USC § 103

The following is a quotation of 35 U.S.C. 103 which forms the basis for all obviousness rejections set forth in this Office action:

> A patent for a claimed invention may not be obtained, notwithstanding that the claimed invention is not identically disclosed as set forth in section 102, if the differences between the claimed invention and the prior art are such that the claimed invention as a whole would have been obvious before the effective filing date of the claimed invention to a person having ordinary skill in the art to which the claimed invention pertains. Patentability shall not be negated by the manner in which the invention was made.

The factual inquiries for establishing a background for determining obviousness under 35 U.S.C. 103 are summarized as follows:

1. Determining the scope and contents of the prior art.

2. Ascertaining the differences between the prior art and the claims at issue.

3. Resolving the level of ordinary skill in the pertinent art.

4. Considering objective evidence present in the application indicating obviousness or nonobviousness.

This application currently names joint inventors. In considering patentability of the claims the examiner presumes that the subject matter of the various claims was commonly owned as of the effective filing date of the claimed invention(s) absent any evidence to the contrary. Applicant is advised of the obligation under 37 CFR 1.56 to point out the inventor and effective filing dates of each claim that was not commonly owned as of the effective filing date of the later invention in order for the examiner to consider the applicability of 35 U.S.C. 102(b)(2)(C) for any potential 35 U.S.C. 102(a)(2) prior art against the later invention.

Claims 1-3, 5, and 7, are rejected under 35 U.S.C. 103 as being unpatentable over Takahashi (JP H09324193 A), hereinafter Takahashi, in view of O'Connor (US 2570841 A), hereinafter O'Connor.

Regarding claim 1, Takahashi discloses a sparkler birthday candle, which comprises a candle body, and comprises a sparkler piece, and is provided with an insertion hole at an upper portion of the candle body for inserting the sparkler piece, which at the lower end is provided with an insertion portion

that can be fitted and inserted into the insertion hole that is close to a birthday candle wick (“The present invention relates to the production of candle services at weddings, the production of various event industries and home parties such as birthdays” and “a hole (15) different from the core is opened in a candle, and the solid fireworks are inserted into the candle” and “A safe and efficient explosive component in which a small amount of sparks rise vertically” all citations are provided from the machine translation appended to the foreign reference).

【図６】

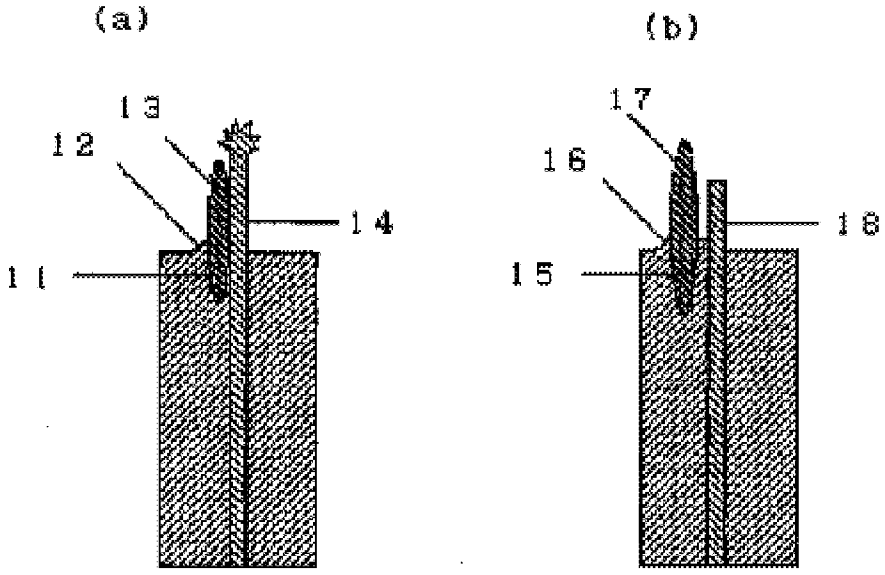

Takahashi does not disclose wherein a lower portion of the candle body is provided with a projection at a lower end of said lower portion to be inserted into a birthday cake.

However, O’Connor teaches wherein a lower portion of the candle body is provided with a projection at a lower end of said lower portion (“a reinforcing stick 11 which may be made either of metal or wood. The stick desirably projects by an end well beyond the bottom end” column 1, line 45) to be inserted into a birthday cake (“Especially when applied to a cake for a birthday party, the instant candles have a captivating attraction for children” column 4, line 7).

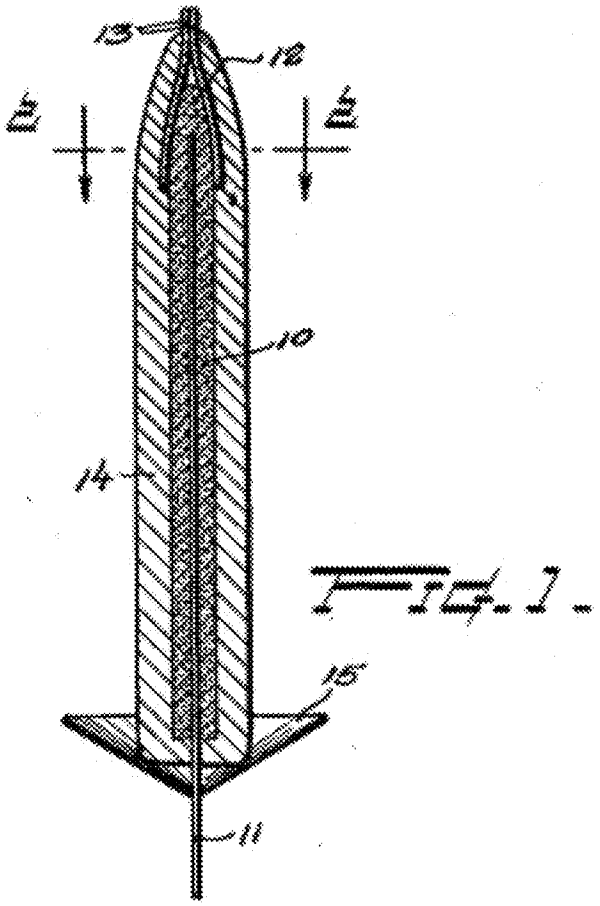

Fig. 1.

In view of the teachings of O'Connor, it would have been obvious to a person having ordinary skill in the art before the effective filing date of the invention to include wherein a lower portion of the candle body is provided with a projection at a lower end of said lower portion to be inserted into a birthday cake as is taught in O'Connor, in the sparkler birthday candle disclosed by Takahashi because O'Connor states "Especially when applied to a cake for a birthday party, the instant candles have a captivating attraction for children." Therefore, providing means for inserting the candle into a cake will improve visual appeal.

Regarding claim 2, Takahashi, as modified by O'Connor, discloses the sparkler birthday candle, according to claim 1, wherein the insertion hole is a tapered hole with a large upper portion and a smaller lower portion (Figure 6b).

Regarding claims 3 and 5, Takahashi, as modified by O'Connor, discloses the sparkler birthday candle according to claim 2, wherein the central axis of the insertion hole and the central axis of the candle wick are parallel (Figure 6b).

Takahashi, as modified by O'Connor, does not explicitly disclose the distance between the two central axes is not greater than 2.5 mm. However, the court has held a prima facie case of obviousness exists where the claimed ranges or amounts do not overlap with the prior art but are merely close. *Titanium Metals Corp. of America v. Banner*, 778 F.2d 775, 783, 227 USPQ 773, 779 (Fed. Cir. 1985). In this case, the figures of Takahashi suggest that the central axes of the wick and insertion hole are in close proximity. Additionally, the wick and pyrotechnics are ostensibly intended to be ignited either simultaneously or else one ignited by the other. Therefore, the distance disclosed in Takahashi will be close to the claimed range.

Regarding claim 7, Takahashi discloses a sparkler candle comprising:

a candle body; and

a sparkler piece is provided with an insertion hole at an upper portion of the candle body for inserting the sparkler piece, which at the lower end is provided with an insertion portion that can be fitted and inserted into the insertion hole that is close to a candle wick.

Takahashi does not disclose wherein a lower portion of the candle body is provided with a projection at a lower end of said lower portion to be inserted into an object.

However, O'Connor teaches wherein a lower portion of the candle body is provided with a projection at a lower end of said lower portion to be inserted into an object ("a reinforcing stick 11 which may be made either of metal or wood. The stick desirably projects by an end well beyond the bottom end" column 1, line 45) to be inserted into a birthday cake ("Especially when applied to a cake for a birthday party, the instant candles have a captivating attraction for children" column 4, line 7).

In view of the teachings of O'Connor, it would have been obvious to a person having ordinary skill in the art before the effective filing date of the invention to include wherein a lower portion of the candle body is provided with a projection at a lower end of said lower portion to be inserted into an object as is taught in O'Connor, in the sparkler birthday candle disclosed by Takahashi because O'Connor states "Especially when applied to a cake for a birthday party, the instant candles have a captivating attraction for children." Therefore, providing means for inserting the candle into a cake will improve visual appeal.

Claims 4 and 6 are rejected under 35 U.S.C. 103 as being unpatentable over Takahashi, in view of O'Connor, and further in view of Namiki (JP H1055709 A), hereinafter Namiki.

Regarding claims 4 and 6, Takahashi, as modified by O'Connor, discloses the sparkler birthday candle according to claim 2.

Takahashi, as modified by O'Connor, does not explicitly disclose wherein the angle of intersection between the central axis of the insertion hole and the central axis of the candle wick is 0.5° to 5° (The examiner initially notes that an angle of 0.5° would potentially be within manufacturing tolerances of the device shown by Takahashi).

However, Namiki teaches an angle of intersection between the central axis of the sparkler piece and the central axis of the candle wick (Figure 4).

【図４】

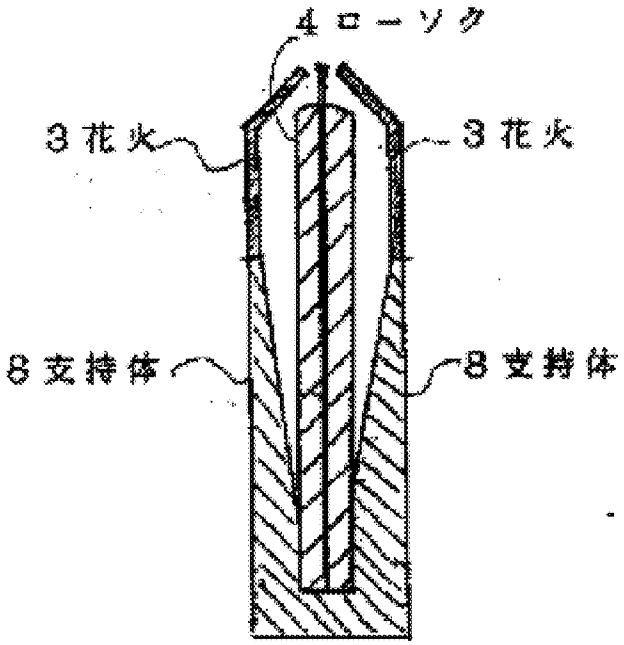

In view of Namiki's teachings, it would have been obvious to a person having ordinary skill in the art before the effective filing date of the invention to include an angle of intersection between the central axis of the sparkler piece and the central axis of the candle wick as is taught in Namiki, in the sparkler birthday candle disclosed by Takahashi because angling the sparkler piece toward the wick will bring the wick and sparkler piece closer further enabling co-ignition of the wick and sparkler piece.

Takahashi, as modified by O'Connor and Namiki, does not disclose an angle of 0.5° to 5°. However, there is a trigonometric relationship between the ignition point, the distance between the wick and insertion hole, and the angle between the wick axis and sparkler piece. For instance, a greater distance will require a greater angle to achieve the same proximity of wick and sparkler piece as compared to a smaller distance. Since the distance between the wick and insertion hole of Takahashi is small, only a small angle will be required. The court has held a prima facie case of obviousness exists where the claimed ranges or amounts do not overlap with the prior art but are merely close. *Titanium*

Metals Corp. of America v. Banner, 778 F.2d 775, 783, 227 USPQ 773, 779 (Fed. Cir. 1985). In this case, the combined teachings of Takahashi as modified suggest a small angle. Therefore, the angle taught by the combination will be close to the claimed range.

Conclusion

The prior art made of record and not relied upon is considered pertinent to applicant's disclosure:

a. Welter (US 0910755 A)

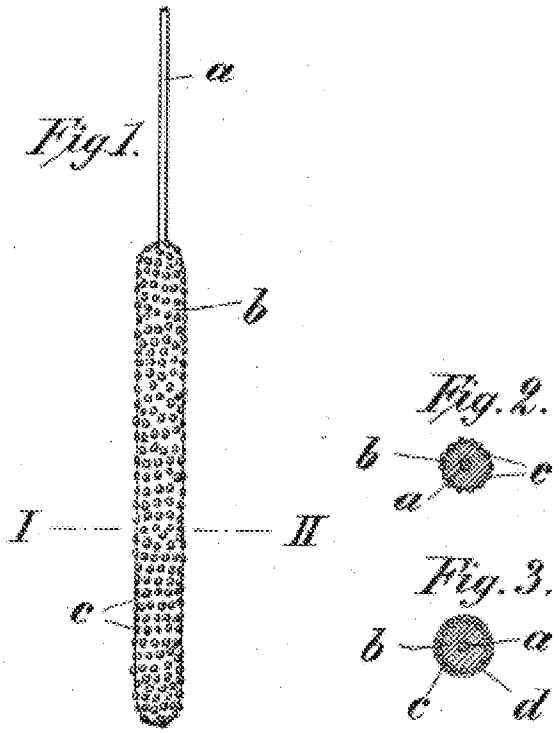

b. Kornfeind (CH 674770 A5)

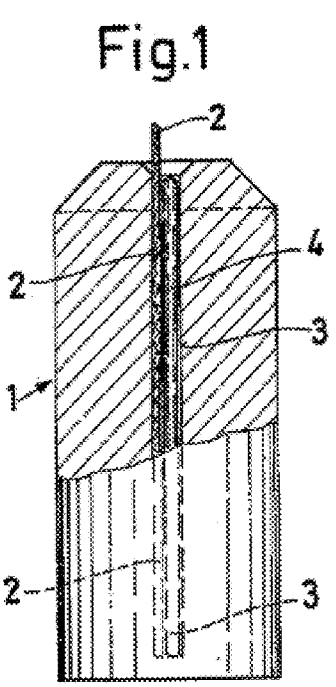

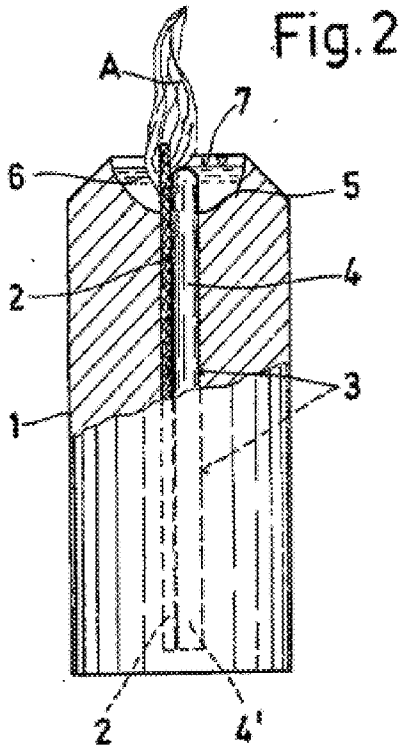

c. Vincent (FR 2796708 A1) “this suspension wire may be coated with coloring substance (for example a pigment) to color the flame, with an odoriferous substance (incense for example) for perfuming, and / or with a chemical substance delivering, for example, sparks in contact with the flame, such as the "sticks" of fireworks (sparklers for example)”

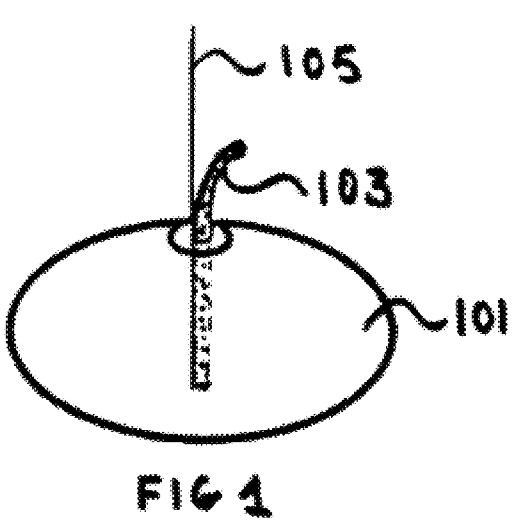

FIG 1

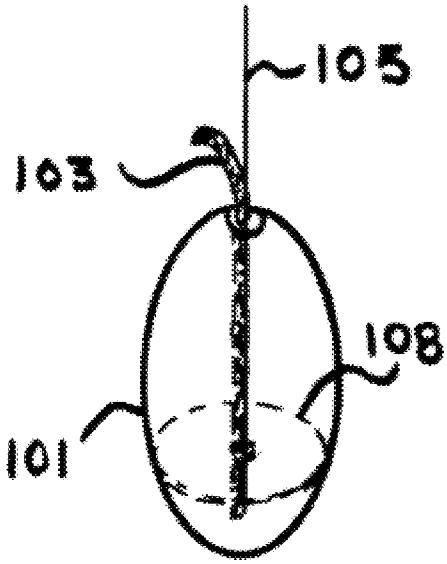

FIG 2

d. Yoshida (JP 2002025332 A) “The present invention ignites fireworks such as sparklers under the influence of flames igniting and burning candles”

【図１】

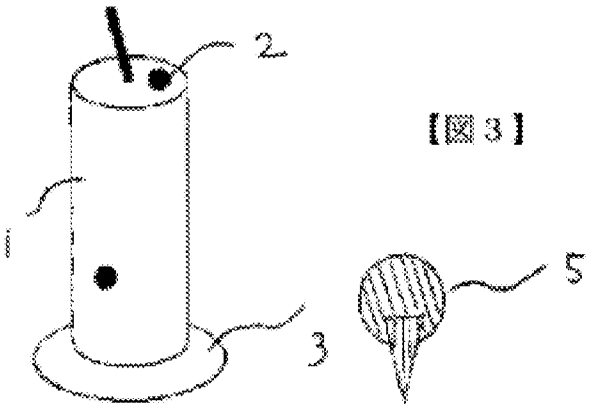

【図３】

e. Yoshida (JP 2002030296 A) “A candle with fireworks, wherein fireworks are attached to an arbitrary position on the surface of the candle”

【図１】

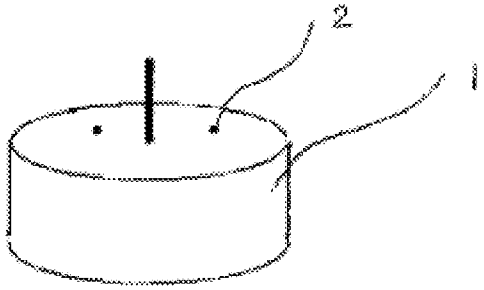

f. Pearson (US 20040163289 A1) “Also included in the list; firework candle (a sparkler next to the wick to cause the emission of sparks while the candle is burning)”

g. Litten-Brown (US 20110045424 A1) “In a particular embodiment, the inclusions are associated with the candle wick. By "associated" is meant that they are retained in close proximity to the wick”

Fig. 2

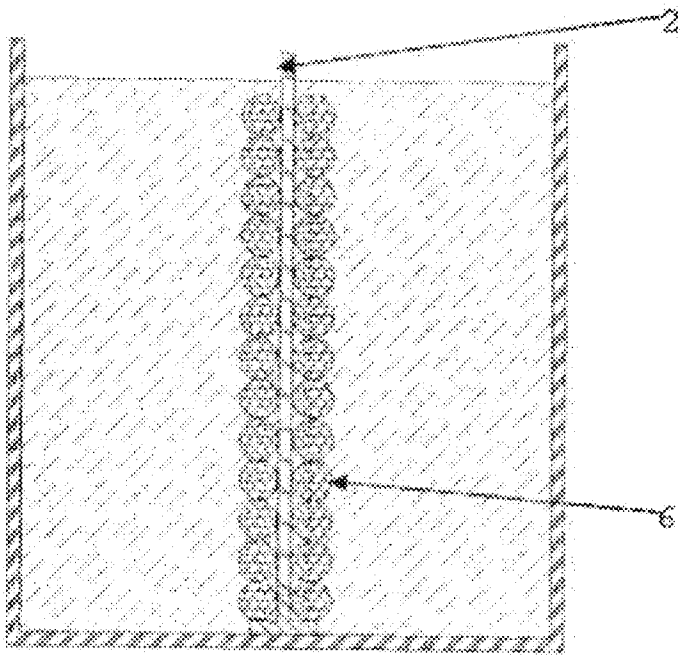

h. Schroder (US 20170175034 A1) “FIG. 4 is a simplified perspective view of yet another embodiment of the candle assembly 410. The candle assembly 410 again includes a container 412 and a candle body 414 that can be substantially similar to the previous embodiments. However, in this embodiment, the cavity 422 extends from the top surface 414A of the candle body 414 downward at an angle into the candle body 414. It is appreciated that the cavity 422 can extend down to any desired depth and the cavity 422 can extend downward into the candle body 414 at any desired angle”

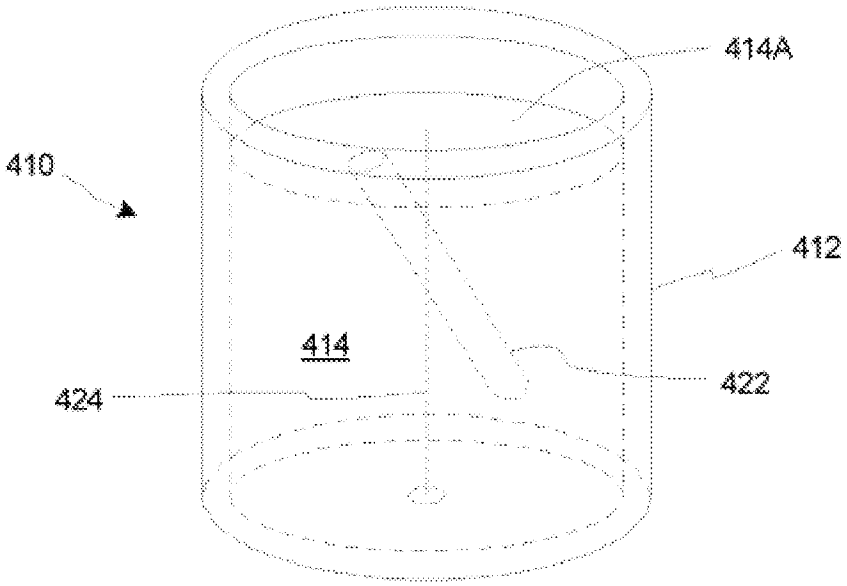

Fig. 4

Any inquiry concerning this communication or earlier communications from the examiner should be directed to LOGAN P JONES whose telephone number is (303)297-4309. The examiner can normally be reached Mon-Fri 8:30-5:00 EST.

Examiner interviews are available via telephone, in-person, and video conferencing using a USPTO supplied web-based collaboration tool. To schedule an interview, applicant is encouraged to use the USPTO Automated Interview Request (AIR) at http://www.uspto.gov/interviewpractice.

If attempts to reach the examiner by telephone are unsuccessful, the examiner's supervisor, Michael Hoang can be reached at (571) 272-6460. The fax phone number for the organization where this application or proceeding is assigned is 571-273-8300.

Information regarding the status of published or unpublished applications may be obtained from Patent Center. Unpublished application information in Patent Center is available to registered users. To file and manage patent submissions in Patent Center, visit: https://patentcenter.uspto.gov. Visit https://www.uspto.gov/patents/apply/patent-center for more information about Patent Center and https://www.uspto.gov/patents/docx for information about filing in DOCX format. For additional questions, contact the Electronic Business Center (EBC) at 866-217-9197 (toll-free). If you would like assistance

from a USPTO Customer Service Representative, call 800-786-9199 (IN USA OR CANADA) or 571-272-1000.

/LOGAN P JONES/
Examiner, Art Unit 3762
/MICHAEL G HOANG/
Supervisory Patent Examiner, Art Unit 3762